| | | | | | | | | | | | | | | | | | | | | | | | | | | | | | |
|---|---|---|---|---|---|---|---|---|---|---|---|---|---|---|---|---|---|---|---|---|---|---|---|---|---|---|---|---|---|
| 3. | VENDING | 3" X 7" | 1¾ | HM | | EN. | HM | 5¾ | | | | | | A | 1½ | | ● | | | | ● | F | | | | | | | |
| 4. | VENDING | 3" X 7" | 1¾ | HM | | EN. | HM | 5¾ | | | | | | | 1½ | | ● | | ● | | | W | | ● | | | | | *1 |
| | | | | | | | | | | | | | | | | | | | | | | | | | | | | | |
| | | | | | | | | | | | | | | | | | | | | | | | | | | | | | |
| | | | | | | | | | | | | | | | | | | | | | | | | | | | | | |
| E. | EXISTING | DOOR | TO | REMAIN | | | | | | | | | | | | | | | | | | | | | | | | | |

NOTE: *1 RELOCATED EXISTING DOOR

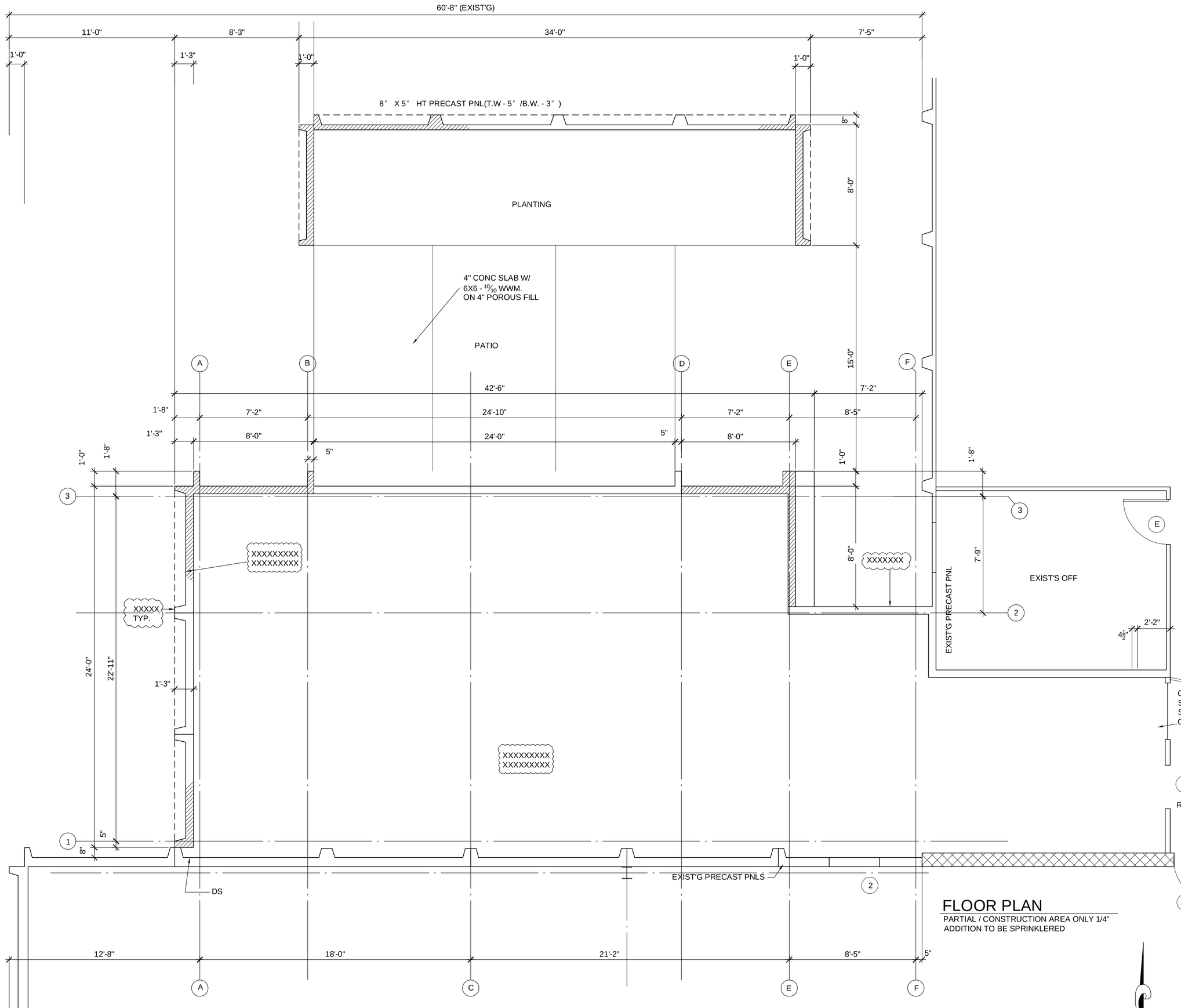


## FLOOR PLAN

PARTIAL / CONSTRUCTION AREA ONLY 1/4"
ADDITION TO BE SPRINKLERED

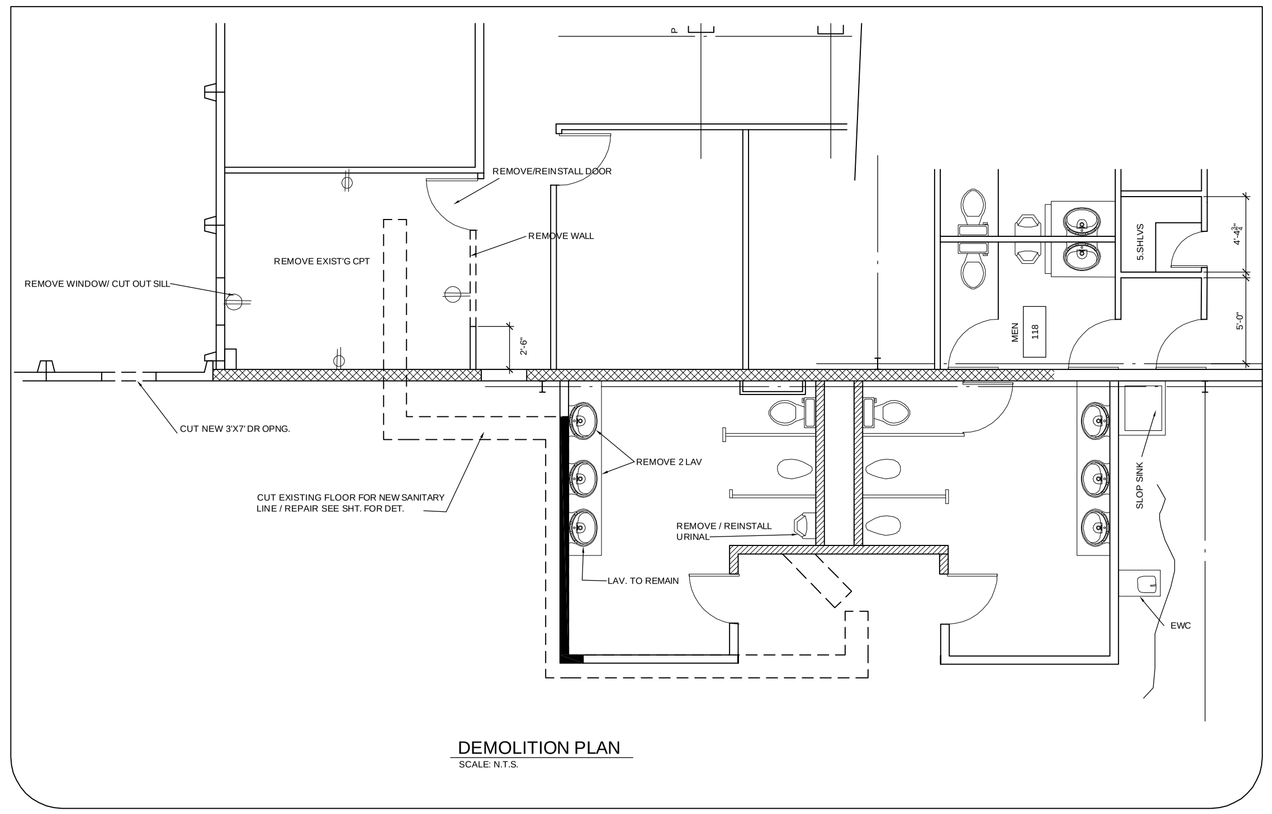


## DEMOLITION PLAN

SCALE: N.T.S.

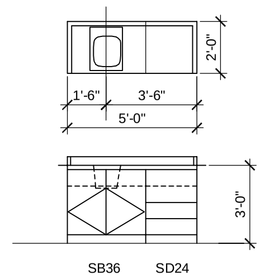


## DET. CNTR 1

SCALE: 1/4" = 1'-0"

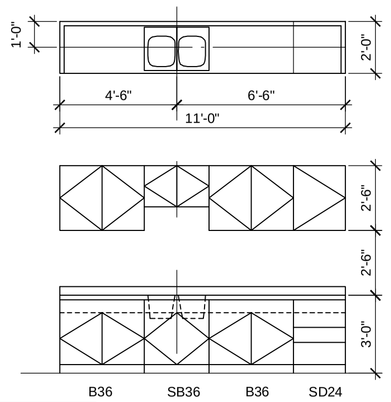


## DET. CNTR 2

SCALE: 1/4" = 1'-0"

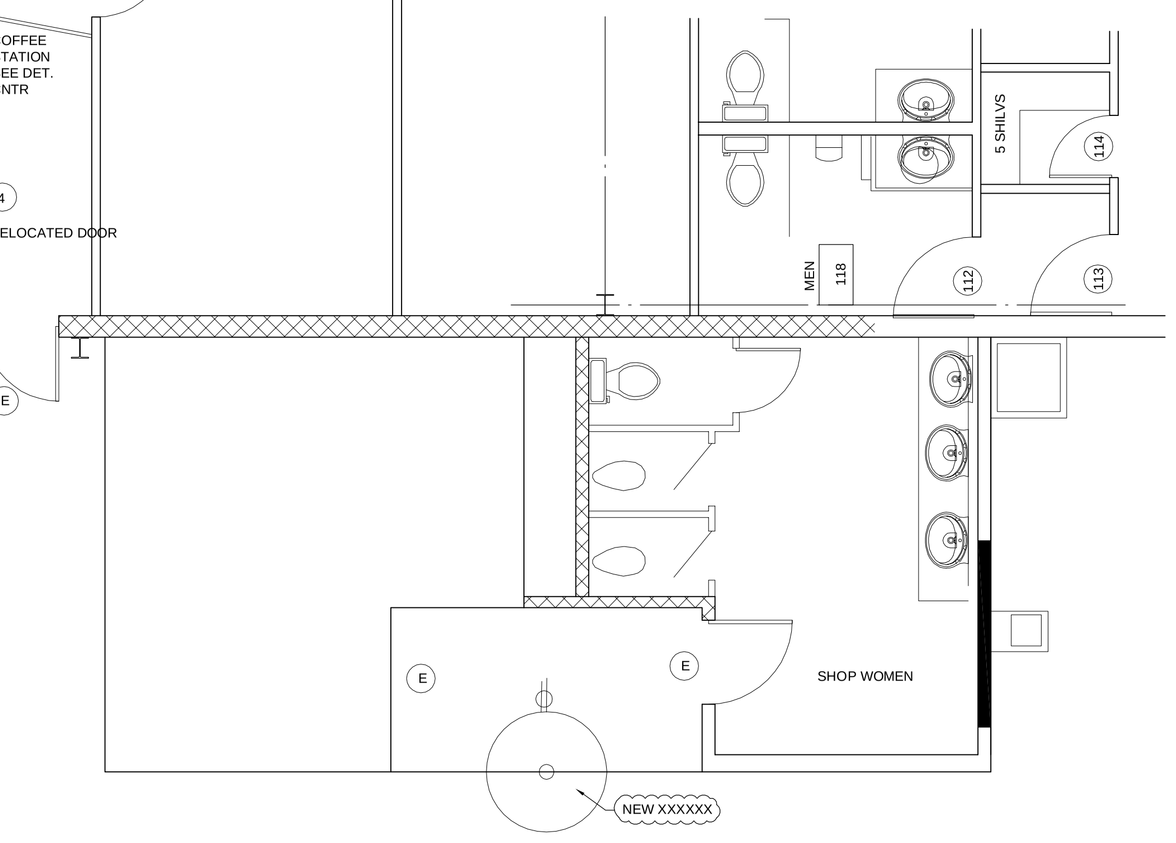


## FINISH / COLOR SCHEDULE

| NO. | LOCATION | FLOOR | | BASE | | N. WALL | | | E. WALL | | | S. WALL | | | W. WALL | | | | | CEILING | | MISC. | | | | | | |
|---|---|---|---|---|---|---|---|---|---|---|---|---|---|---|---|---|---|---|---|---|---|---|---|---|---|---|---|---|
| | | FIN | # | FIN | # | W# | FIN | # | W# | FIN | # | W# | FIN | # | W# | FIN | # | | | FIN | HT | CNTR TOP | CABINET | PARTITION | | | | | |
| | LUNCH | VCT | | VIN | | PC | | | PC | | | PC | | | PC | | | | | STRUCT | | | | | | | | | |
| | VENDING | VCT | | VIN | | D | PTD | | D | PTD | | D | PTD | | D | PTD | | | | | 8" | ● | ● | | | | | | |
| | MEN | VCT | | VIN | | | —— | | | PTD | | | —— | | | PTD | | | | —— | | ● | | ● | | | | | ① |

## 3 NORTHWEST ADDITION TO BUILDING

SCALE: N.T.S.